Acoustement by PYROK™
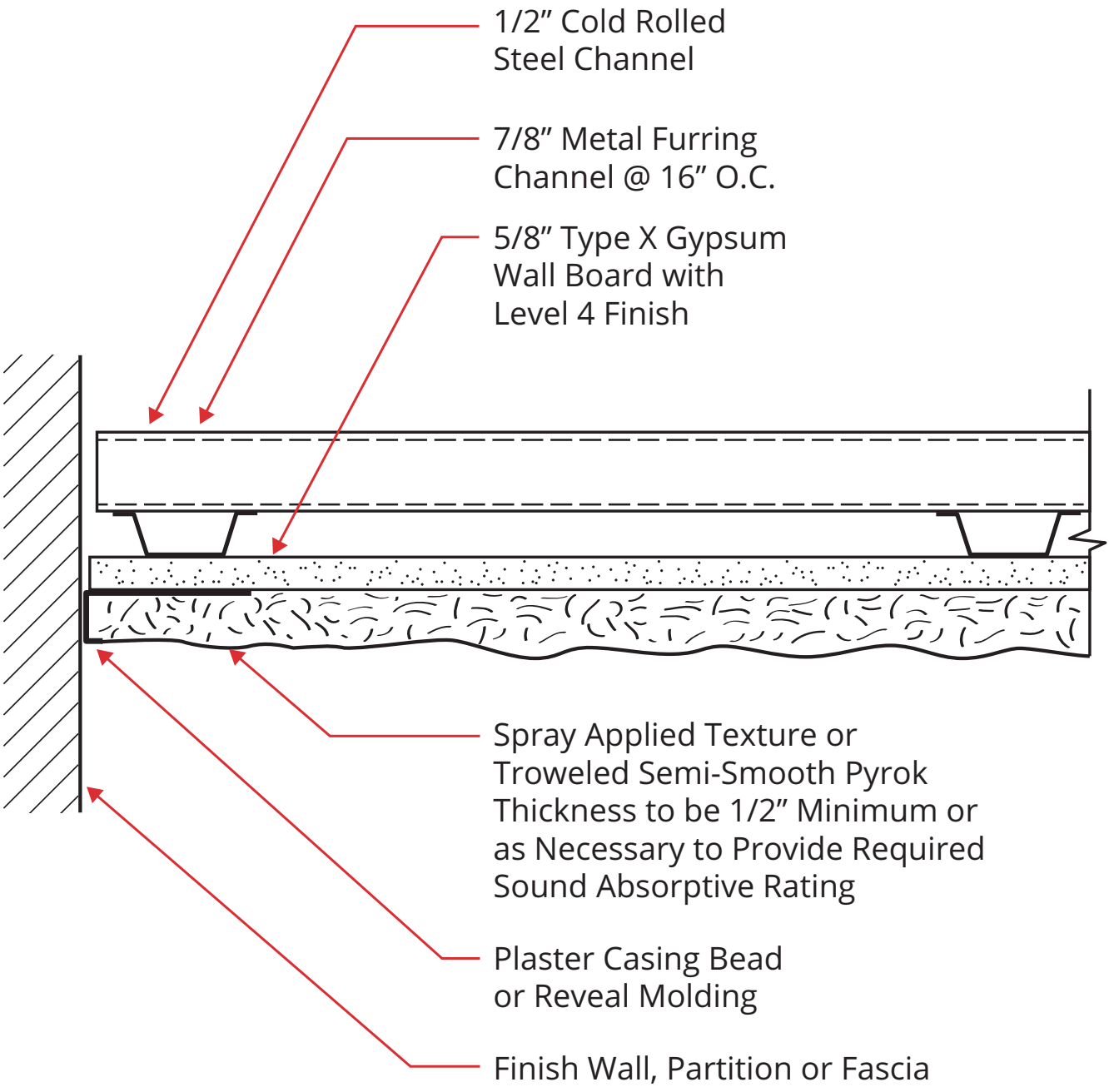
Details
Perimeter